Cambridge Assessment International Education

Cambridge International AS & A Level

CANDIDATE NAME	

CENTRE NUMBER						CANDIDATE NUMBER				

0123456789

PHYSICS **9702/03**

Paper 3 Advanced Practical Skills 1 **For examination from 2022**

SPECIMEN PAPER **2 hours**

You must answer on the question paper.

You will need: The materials and apparatus listed in the confidential instructions

INSTRUCTIONS

- Answer **all** questions.
- Use a black or dark blue pen. You may use an HB pencil for any diagrams or graphs.
- Write your name, centre number and candidate number in the boxes at the top of the page.
- Write your answer to each question in the space provided.
- Do **not** use an erasable pen or correction fluid.
- Do **not** write on any bar codes.
- You will be allowed to work with the apparatus for a maximum of 1 hour for each question.
- You should record all your observations in the spaces provided in the question paper as soon as these observations are made.
- You may use a calculator.
- You should show all your working and use appropriate units.

INFORMATION

- The total mark for this paper is 40.
- The number of marks for each question or part question is shown in brackets [ ].

For Examiner's Use	
1	
2	
Total	

This document has **12** pages. Blank pages are indicated.

© UCLES 2019

You may not need to use all of the materials provided.

1 In this experiment, you will investigate the motion of a chain of paper clips.

You have been provided with a chain of fifteen paper clips with a sphere of modelling clay attached to one end of the chain.

(a) Measure and record the length *L* of one paper clip as shown in Fig. 1.1.

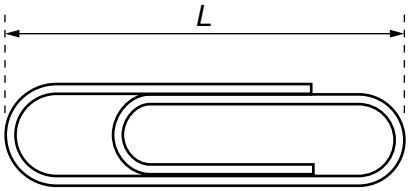

Fig. 1.1

L = ... [1]

(b) • Set up the apparatus as shown in Fig. 1.2.

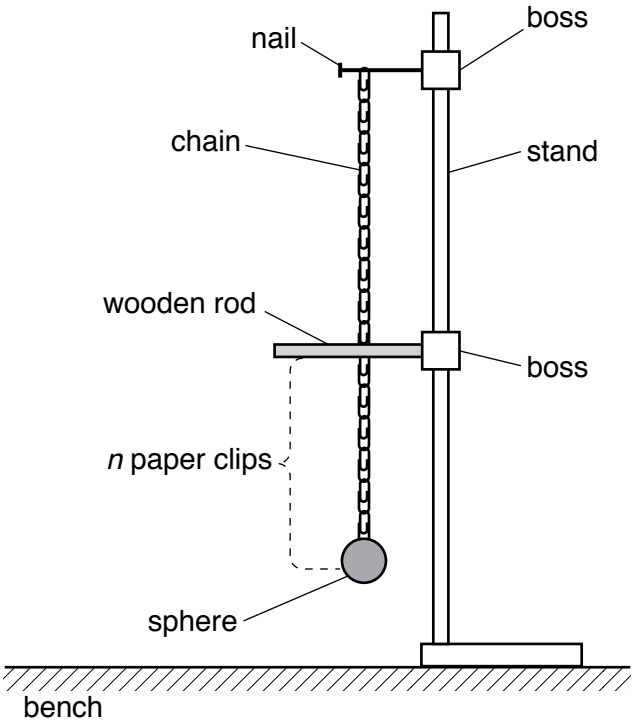

Fig. 1.2

- Suspend the chain from the nail.
- Position the wooden rod so that the chain, when hanging vertically, just touches the rod. The number *n* of paper clips below the rod should be equal to 6.
- Move the sphere towards you through a distance of approximately 10 cm. Release the sphere. The chain will oscillate and hit the rod during these oscillations.
- Determine the period *T* of the oscillations.

T = ... [2]

© UCLES 2019

(c) Change n by moving the wooden rod vertically and determine T. Repeat until you have six sets of values of n and T.

Record your results in a table. Include values of $\sqrt{n}$ to three significant figures in your table.

[8]

(d) **(i)** Plot a graph of T on the y-axis against $\sqrt{n}$ on the x-axis. [3]

(ii) Draw the straight line of best fit. [1]

(iii) Determine the gradient and y-intercept of this line.

gradient = ...

y-intercept = ...

[2]

© UCLES 2019

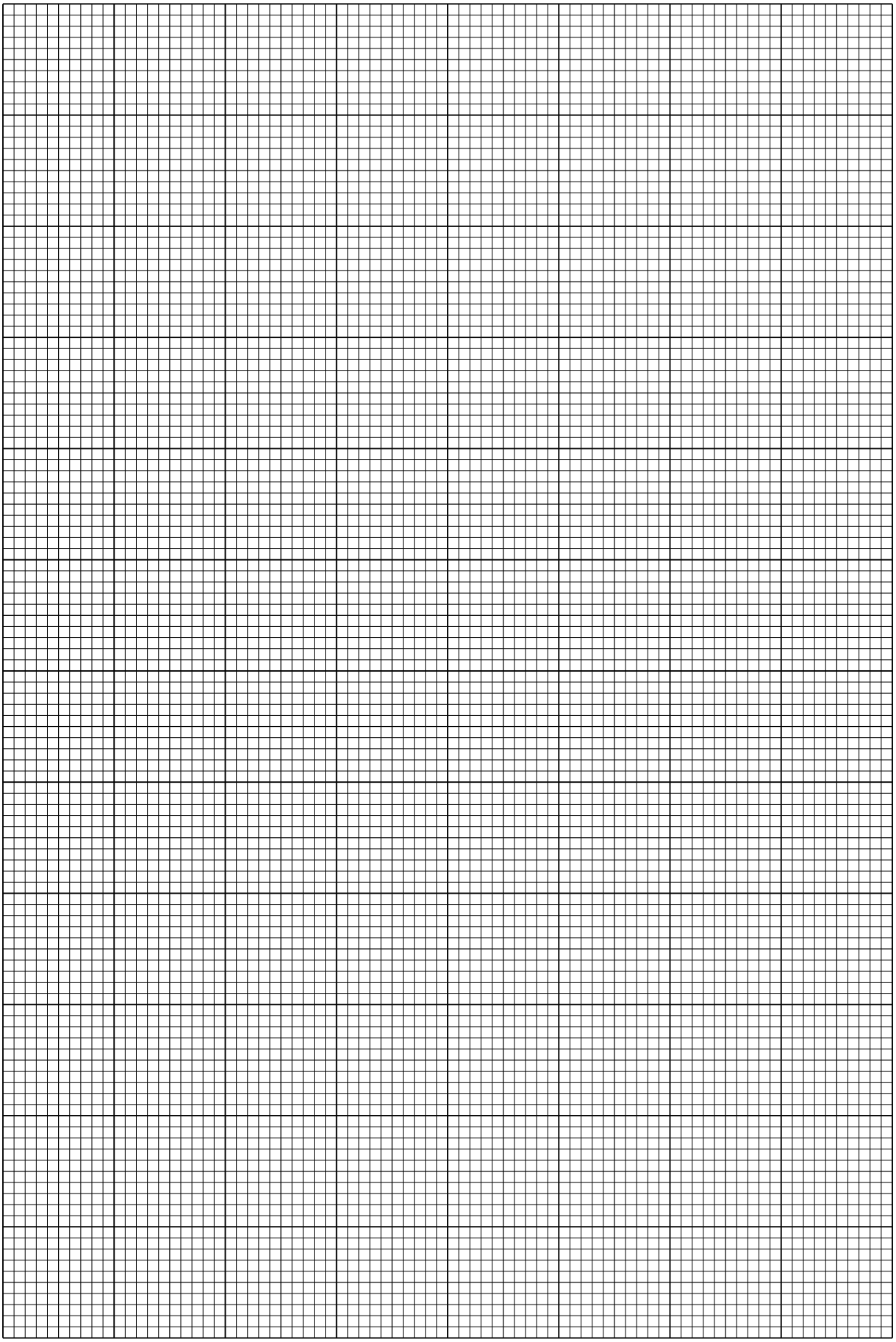

(e) It is suggested that the quantities T and n are related by the equation

$$T = P\sqrt{n} + Q$$

where P and Q are constants.

Using your answers in **(d)(iii)**, determine the values of P and Q.
Give appropriate units.

P = ...

Q = ...
[2]

(f) Theory suggests that

$$P = \pi\sqrt{\frac{L}{g}}$$

where g is the acceleration of free fall.

Use your values in **(a)** and **(e)** to determine a value for g.
Give an appropriate unit.

g = ... [1]

[Total: 20]

You may not need to use all of the materials provided.

2 In this experiment, you will investigate the potential difference across a current-carrying wire.

You have been provided with a wooden strip with wires attached.

(a) The wire attached between A and B has a diameter *D*.

(i) Without detaching the wire from the board, measure and record *D*.

D = ... [1]

(ii) Estimate the percentage uncertainty in your value of *D*. Show your working.

percentage uncertainty = ...% [1]

(b) • Set up the circuit shown in Fig. 2.1.

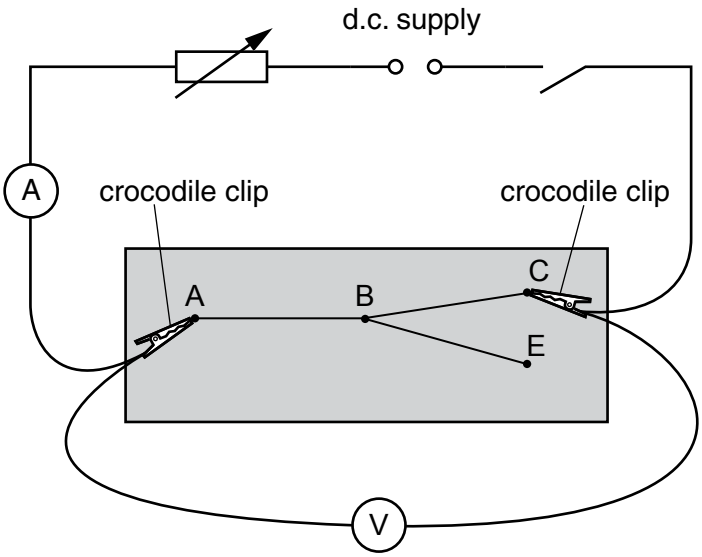

Fig. 2.1

- Connect the crocodile clips to A and C.
- Adjust the rheostat to approximately the middle of its range.
- Close the switch.
- Record the ammeter reading.

ammeter reading = ...

- Record the voltmeter reading *V*.

V = ...

- Open the switch.

[2]

© UCLES 2019

(c) (i) The wire attached between B and C has a diameter d.

Measure and record d.

d = ... [1]

(ii) Calculate G where

$$G = \frac{D^2 + d^2}{D^2 d^2}.$$

G = ... [1]

(iii) Justify the number of significant figures that you have given for your value of G.

.....

.....

..... [1]

(d)
- Disconnect the crocodile clip from C and connect it to E.
- Close the switch.
- Adjust the rheostat so that the ammeter reading is as close as possible to the reading in **(b)**.
- Record the voltmeter reading *V*.

V = ...

- Open the switch.

[2]

(e) The wire attached between B and E has diameter *d*.

- Measure and record *d*.

d = ...

- Calculate *G*.

G = ...
[1]

(f) It is suggested that the relationship between V and G is

$$V = kG$$

where k is a constant.

Using your data, calculate two values of k.

first value of k = ...

second value of k = ...
[1]

(g) It is suggested that the percentage uncertainty in the values of k is 5%.

Using this uncertainty, explain whether your results support the relationship in **(f)**.

.....

.....

.....

..... [1]

(h) (i) Describe **four** sources of uncertainty or limitations of the procedure for this experiment.

For any uncertainties in measurement that you describe, you should state the quantity being measured and a reason for the uncertainty.

1 .....

.....

2 .....

.....

3 .....

.....

4 .....

.....

[4]

(ii) Describe **four** improvements that could be made to this experiment. You may suggest the use of other apparatus or different procedures.

1 .....

.....

2 .....

.....

3 .....

.....

4 .....

.....

[4]

[Total: 20]

Permission to reproduce items where third-party owned material protected by copyright is included has been sought and cleared where possible. Every reasonable effort has been made by the publisher (UCLES) to trace copyright holders, but if any items requiring clearance have unwittingly been included, the publisher will be pleased to make amends at the earliest possible opportunity.

Cambridge Assessment International Education is part of the Cambridge Assessment Group. Cambridge Assessment is the brand name of the University of Cambridge Local Examinations Syndicate (UCLES), which itself is a department of the University of Cambridge.